PROVISIONAL ANSWER KEY

Question Paper Code:	183/2026/OL
Category Code:	777/2025
Exam:	Technician Gr-II (Fitter Mechanic)
Date of Test	24-11-2026
Department	Printing Department

Question1:-Which of the following statement is correct in connection with the manufacturing of scribers ?
i. Scribers are made of low carbon steel
ii. Scribers are made of high carbon steel
iii. Scribers are made of mild steel

A:-Only i and ii are correct

B:-Only i and iii are correct

C:-Only ii is correct

D:-i, ii and iii are correct

Correct Answer:- Option-C

Question2:-Which of the following statement is correct in connection with prick punch ?
i. The angle of prick punch is 30 degree
ii. The angle of prick punch is 60 degree
iii. The angle of prick punch is 90 degree

A:-Only i and ii are correct

B:-Only i and iii are correct

C:-Only iii is correct

D:-Only ii is correct

Correct Answer:- Option-A

Question3:-What is the use of Angle plates ?

A:-Measuring diameter

B:-Supporting workpiece

C:-Cutting metal sheets

D:-Measuring thread pitch

Correct Answer:- Option-B

Question4:-Which instrument is used to transfer measurements from a steel rule to objects and
vice-versa ?

A:-Caliper

B:-Try sqaure

C:-Bench vice

D:-Micrometer

Correct Answer:- Option-A

Question5:-What is point angle of the centre punch ?

A:-60 degree

B:-90 degree

C:-30 degree

D:-45 degree

Correct Answer:- Option-B

Question6:-Which of the following statement is correct about dividers ?
i. Dividers are using for scribing circles
ii. Dividers are using for scribing arcs
iii. Dividers are using for transferring and stepping of distances.

A:-Only i and ii are correct

B:-Only i and iii are correct

C:-Only ii is correct

D:- i, ii and iii are correct

Correct Answer:- Option-D

Question7:-Which is the following calipers are known as hermaphrodite calipers ?

A:-Jenny calipers

B:-Odd leg calipers

C:-Leg and point calipers

D:-All of these

Correct Answer:- Option-D

Question8:-Which of the following is the use of surface gauges ?

A:-Scribing lines parallel to a datum surface

B:-Setting jobs concetric to the machine spindle

C:-Checking height and parallelism of jobs

D:-All of these

Correct Answer:- Option-D

Question9:-Which punch is used for locating holes ?

A:-60 degree prick punch

B:-30 degree prick punch

C:-Centre Punch

D:-None of these

Correct Answer:- Option-C

Question10:-What is the main use of a combination set ?

A:-Cutting metal

B:-Measuring and marking

C:-Drilling holes

D:-Holding workpieces

Correct Answer:- Option-B

Question11:-Which of the following statements are correct ?
i. 1 mile = 1760 yard
ii. 1 micron = 0.0001 cm
iii. 1 decametre = 10 metre
iv. 1 decimetre = 10 cm

A:-Only i and iv

B:-Only i, ii and iv

C:-Only i and ii

D:-i, ii, iii and iv

Correct Answer:- Option-D

Question12:-Which of the following statement is correct about the legs of a Jenny caliper ?

A:-Both legs straight and sharp

B:-Both legs bend towards inside

C:-One leg is straight and sharp, while the other is bent inward

D:-One leg is straight and sharp, while the other is bent outward

Correct Answer:- Option-C

Question13:-The accuracy of ordinary Bevel protractor is

A:-1°

B:- 5'

C:-5"

D:-0.1°

Correct Answer:- Option-A

Question14:-
Which of the following is a fundamental unit ?

A:-Power

B:-Mass

C:-Force

D:-Weight

Correct Answer:- Option-B

Question15:-What is the shape of Phillips screw driver tip ?

A:-Cross shaped

B:-Hexagonal shaped

C:-Diagonal shaped

D:-Flat shaped

Correct Answer:- Option-A

Question16:-Which of the following statements are incorrect about steel rule ?
i. The accuracy of a steel rule is 1/64 of an inch.
ii. A narrow rule is usually a set of small rules used to measure small spaces. It is used by holding the rules in a holder.
iii. The error caused by viewing the graduation of a steel rule from an angle is called parallax error.
iv. A shrink rule differs from other rules in that its inches are slightly shorter than standard inches.

A:-Only i and iii

B:-Only i, ii and iii

C:-Only ii, iii and iv

D:-Only ii and iv

Correct Answer:- Option-D

Question17:-The angle of the jaws of a standard open-end spanner typically offset from the handle axis is

A:-10°

B:-15°

C:-30°

D:-60°

Correct Answer:- Option-B

Question18:-_____ is a precision checking tool used to check the straightness and flatness of a workpieces.

A:-Straight edge

B:-Steel rule

C:-Try square

D:-Spirit level

Correct Answer:- Option-A

Question19:-Which of the following statements are incorrect about vice ?
i. The material which is used to manufacture spindle of bench vice is tool steel.
ii. Tool makers vice consists of a handle and a small collet chuck at one end.
iii. The spindle and nut of quick releasing vice have buttress threads.
iv. Bench vice is fitted on the machine table with the help of ‘T’ bolt and nut.

A:-Only i, ii and iii

B:-Only i and ii

C:-Only i, ii and iv

D:-i, ii iii and iv

Correct Answer:- Option-C

Question20:-Which of the following statements are correct about hammer ?
i. The weight of hammer used for marking purpose is 250g.
ii. The striking face of a ball pein hammer is usually soft and polished.
iii. Hammer is made of drop-forged carbon steel.
iv. The cross-pein hammer is used for spreading the metal in one direction.

A:-Only i and iii

B:-Only i, ii and iv

C:-Only i, iii and iv

D:-i, ii, iii and iv

Correct Answer:- Option-C

Question21:-Which part of a file is not hardened and tempered ?

A:-Face

B:-Tang

C:-Heel

D:-Point

Correct Answer:- Option-B

Question22:-The metal particles are clogged between the teeth of a file is known as

A:-Pinning of file

B:-Loading

C:-Crowning

D:-Wringing

Correct Answer:- Option-A

Question23:-Why are files given a slight convexity along their length ?

A:-To prevent rest

B:-To increase the weight of file

C:-To reduce filing pressure and prevent rounding of edges of work piece

D:-To make better appearance

Correct Answer:- Option-C

Question24:-Which type of file cut is recommended for filing wood and leather ?

A:-Single cut

B:-Curved cut

C:-Rasp cut

D:-Second cut

Correct Answer:- Option-C

Question25:-
All hard hacksaw blades are hardened

A:-Only at the teeth

B:-Only at the center

C:-Only near the pin holes

D:-Entirely across the blade length except near pin holes

Correct Answer:- Option-D

Question26:-Which chisel is used to separate metals after chain drilling ?

A:-Web chisel

B:-Diamond point chisel

C:-Flat chisel

D:-Cape chisel

Correct Answer:- Option-A

Question27:-What will happen if the clearance angle of a chisel is too high while chipping ?

A:-The chisel will dig

B:-The chisel will slip

C:-The chisel will not cut the work piece

D:-All of the above

Correct Answer:- Option-A

Question28:-Which portion of the drill body is slightly reduced in diameter behind the margin to reduce friction ?

A:-Tang

B:-Flute

C:-Body clearance

D:-Web

Correct Answer:- Option-C

Question29:-Calculate the drill size required for reaming a 10 mm hole (Under size = 0.2 mm, Oversize = 0.05 mm).

A:-10.25 mm

B:-9.95 mm

C:-9.85 mm

D:-9.75 mm

Correct Answer:- Option-D

Question30:-What is the standard countersink angle for rivets and flat head screws ?

A:-75°

B:-100°

C:-90°

D:-120°

Correct Answer:- Option-C

Question31:-Which fundamental tolerances are given according to Indian Standard System ?

A:-16

B:-18

C:-24

D:-25

Correct Answer:- Option-B

Question32:-Which statement is correct given below ?
i. The accuracy of micro meter and vernier caliper is same.
ii. The dial test indicator also used as a comparator.
iii. The zero error is connected with slip gauges.
iv. Sine bar is commonly used with slip gauges.

A:-i, ii and iv

B:-i, ii and iii

C:-ii and iv

D:-iv only

Correct Answer:- Option-C

Question33:-Snap gauges are used for check

A:-Inside and taper dimensions

B:-Taper dimensions

C:-Outside dimensions only

D:-Inside dimensions only

Correct Answer:- Option-C

Question34:-Which is the least thickness of blade in feeler gauge set ?

A:-0.01 mm

B:-0.02 mm

C:-0.03 mm

D:-0.05 mm

Correct Answer:- Option-C

Question35:-Algebraic difference between minimum limit and basic size

A:-Actual deviation

B:-Lower deviation

C:-Upper deviation

D:-Basic deviation

Correct Answer:- Option-B

Question36:-Sine bars are made from

A:-Stabilized chromium steel

B:-Stainless steel

C:-High carbon steel

D:-Cast iron

Correct Answer:- Option-A

Question37:-Which is the accuracy of Vernier bevel protractor ?

A:-1 minute

B:-3 minute

C:-2 minute

D:-5 minute

Correct Answer:- Option-D

Question38:-Ratchet stop is a part of which precision measuring instrument ?

A:-Dial caliper

B:-Vernier caliper

C:-Micro meter

D:-Vernier bevel protractor

Correct Answer:- Option-C

Question39:-Which statement is correct about jigs and fixtures ?
i. Fixtures are generally used in drilling machine.
ii. Jigs are commonly used in drilling machine.
iii. Marking required while using a fixture.
iv. Jigs are hold and locate the job and guide the cutting tool.

A:-i, ii and iii

B:-i, iii and iv

C:-i, ii and iv

D:-ii, iii and iv

Correct Answer:- Option-D

Question40:-The term wringing is connected with

A:-Slip gauges

B:-Sine bar

C:-Micro meter

D:-Vernier bevel protractor

Correct Answer:- Option-A

Question41:-Which type of fasteners is used to positioning and holding collars in place, on shafts ?

A:-Cap screws

B:-Set screws

C:-Machine bolts

D:-Stud bolts

Correct Answer:- Option-B

Question42:-Which type of coupling is used to connect two parallel shafts whose axes are slightly offset from each other ?

A:-Oldham coupling

B:-Spider coupling

C:-Universal coupling

D:-Solid flanged coupling

Correct Answer:- Option-A

Question43:-Which of the following clutches provides a positive drive ?

A:-Centrifugal clutch

B:-Con clutch

C:-Dog clutch

D:-Multi plate clutch

Correct Answer:- Option-C

Question44:-Which of the following statement is/are correct regarding soldering flux ?
i. Flux removes oxides from the soldering surfaces and prevents further oxidation.
ii. It forms a protective liquid layer over the workpiece and prevents further oxidation.
iii. It helps molten solder to flow easily in the required place.

A:-Only i

B:-Only i and ii

C:-Only ii

D:-All of the above i, ii and iii

Correct Answer:- Option-D

Question45:-Spelters used in brazing is an alloy of

A:-Copper and Zinc

B:-Tin and lead

C:-Copper and Tin

D:-Zinc and Tin

Correct Answer:- Option-A

Question46:-Which type of rivet is shown in figure ?



A:-Countersunk head rivet

B:-Pan head rivet

C:-Conical head rivet

D:-Bifurcated rivet

Correct Answer:- Option-B

Question47:-Which of the following statement is/are correct regarding the tension of belt ?
i. The tension ratio is the ratio of the tension on the tight side to the tension on the slack side.
ii. An idler pulley is used to adjust the tension between two pulleys that are in fixed positions.
iii. When the distance between the two pulleys is not fixed, the belt tension is adjusted by adjusting the screw.

A:- Only i

B:-Only ii

C:-Only ii and iii

D:-All of the above i, ii and iii

Correct Answer:- Option-D

Question48:-Which tool is used for closing the edges of plates and the heads of rivets to form a metal-to-metal joint ?

A:-Fullering tool

B:-Drift

C:-Caulking tool

D:-Rivet snap

Correct Answer:- Option-C

Question49:-Which of the following statement is/are correct regarding the functions of a bearing ?
i. It support and hold the shaft in a fixed position.
ii. It allow the shaft to run freely.
iii. It reduces friction between the moving surfaces.

A:-Only i

B:-Only ii

C:-Only ii and iii

D:-All of the above i, ii and iii

Correct Answer:- Option-D

Question50:-Which of the following types of bearings is designed to carry both axial (thrust) and radial loads ?

A:-Thrust bearing

B:-Roller bearing

C:-Angular contact ball bearing

D:-Needle bearing

Correct Answer:- Option-C

Question51:-Which caste iron is also known as Spheroidal graphite iron ?

A:-White cast iron

B:-Grey cast iron

C:-Nodular cast iron

D:-Malleable cast iron

Correct Answer:- Option-C

Question52:-Which of the following metal is produced by puddling process ?

A:-Wrought iron

B:-Cast iron

C:-Pig iron

D:-Mild steel

Correct Answer:- Option-A

Question53:-Which of the following plain carbon steel contains 0.3% to 0.5% carbon ?

A:-Dead mild steel

B:-Low carbon steel

C:-Medium carbon steel

D:-High carbon steel

Correct Answer:- Option-C

Question54:-Copper is extracted from its ore

A:-Galena

B:-Pyrites

C:-Calamine

D:-Bauxite

Correct Answer:- Option-B

Question55:-In the heat treatment process, mainly _____ of the steel is changed.

A:-Specific gravity

B:-Specific weight

C:-Structure

D:-Magnetic property

Correct Answer:- Option-C

Question56:-Which of the following is obtained by tempering ?

A:- Remove extreme brittleness

B:-Increase the hardness

C:-Improve machinability

D:-Increase malleability

Correct Answer:- Option-A

Question57:-Which of the following is not a purpose of annealing ?

A:-To soften the steel

B:-To decrease the ductility

C:-To improve the machinability

D:-To relieve the internal stresses

Correct Answer:- Option-B

Question58:-In which process, metal heated uniformly to a temperature of 30 to 40°C above the upper critical temperature followed by cooling in still air ?

A:-Carburising

B:-Normalizing

C:-Tempering

D:-Pre cooling

Correct Answer:- Option-B

Question59:-What is the purpose of hardening ?
i. To develop the wear resistance
ii. To increase machinability
iii. To add cutting ability

A:-Only i and ii

B:-Only ii and iii

C:-Only i and iii

D:-All of the above i, ii and iii

Correct Answer:- Option-C

Question60:-Which heat treatment process increase the hardness of the outer surface of the metal and the core remains relatively soft ?

A:-Annealing

B:-Normalising

C:-Tempering

D:- Case hardening

Correct Answer:- Option-D

Question61:-Which bricks is used for lining forge furnace hearths ?

A:-Aluminum

B:-Dinas Bricks

C:-Talc Brick

D:-Cement

Correct Answer:- Option-C

Question62:-Dinas bricks also called

A:-Fire clay Bricks

B:-Talc Bricks

C:-Sand Bricks

D:-Quartz Bricks

Correct Answer:- Option-D

Question63:-Which of the following vice is usually used in forged shop ?

A:-Leg vice

B:-Hand vice

C:-Pin vice

D:-Pipe vice

Correct Answer:- Option-A

Question64:-Forging is done, when the metal is in

A:-Elastic condition

B:-Plastic condition

C:-Both 1 and 2

D:-None of the above

Correct Answer:- Option-B

Question65:-Sprinkler is used for

A:-Permit cooled air

B:-Localize the heat

C:-Remove clinkers from fire

D:-Control smoke and spark

Correct Answer:- Option-B

Question66:-Cold set is used for

A:-Cutting the metal in cold state

B:-Cutting the metal in hot state

C:-Upsetting operation

D:-Bending operation

Correct Answer:- Option-A

Question67:-Which of the following defect of Drawing out ?

A:-Surface and internal crack

B:-Fold

C:-Buckling of the stock

D:-Axial crack and fold

Correct Answer:- Option-D

Question68:-Which of the following defect of Upsetting ?

A:-Buckling of the stock

B:-Laps

C:-Sag

D:-Internal cracks

Correct Answer:- Option-A

Question69:-What is the colour of the steel in forging operation when heating at 800˚C ?

A:-Dull brown

B:-Dull cherry red

C:-Bright cherry red

D:-Red

Correct Answer:- Option-B

Question70:-Anvil tail (square beak) is used for

A:-Drawing down and cutting off metal

B:-Rounding operation

C:-Upsetting operation

D:-Bend the work at right angles

Correct Answer:- Option-D

Question71:-Cutting angle of a straight snips is

A:-90˚

B:-87˚

C:-83˚

D:-75˚

Correct Answer:- Option-B

Question72:-Snips are used to cut sheet metal up to

A:-16 SWG

B:-18 SWG

C:-20 SWG

D:-24 SWG

Correct Answer:- Option-C

Question73:-_____ is a shaping tool used for forming of sheet metal.

A:-Ball pean hammer

B:-Setting hammer

C:-Creasing hammer

D:-Mallet hammer

Correct Answer:- Option-D

Question74:-Name the tool shown in the figure.



A:-Creasing hammer

B:-Stretching hammer

C:-Bullet hammer

D:-Planishing hammer

Correct Answer:- Option-A

Question75:-Name the stake which is very useful for making sharp bend.

A:-Hatchet stake

B:-Beak iron stake

C:-Creasing iron stake

D:-Tinman’s anvil

Correct Answer:- Option-A

Question76:-Which hammer is used to draw deep hollowing where the hollowing hammer cannot be used ?

A:-Planishing hammer

B:-Peening hammer

C:-Stretching hammer

D:-Bullet hammer

Correct Answer:- Option-D

Question77:-Name the stake which have two rectangular shaped horns, one of it is plain and other horn contains a series of grooving slots of various size.

A:-Bick iron stake

B:-Creasing iron stake

C:-Square edge stake

D:-Hatchet stake

Correct Answer:- Option-B

Question78:-Name the stake shown in the figure.

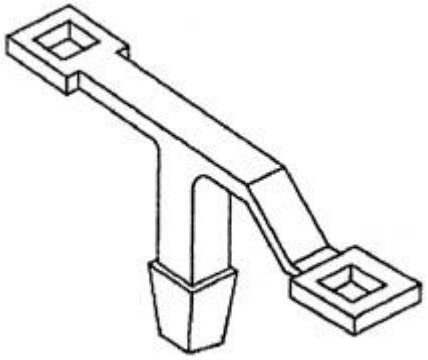

A:-Square edge stake

B:-Tinman’s anvil

C:-Tinman’s horse

D:-Square stake

Correct Answer:- Option-C

Question79:-The galvanised iron sheet is

A:-Zinc sheet coated with iron

B:-Iron sheet coated with zinc

C:-Iron sheet coated with lead

D:-Aluminium sheet coated with zinc

Correct Answer:- Option-B

Question80:-Name the sheet metal joint shown in the figure.

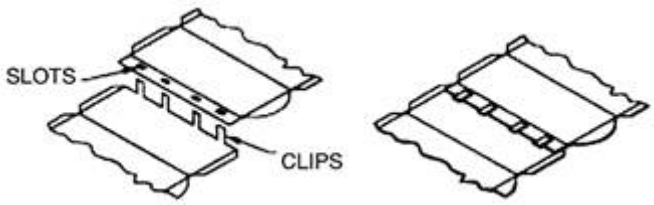

A:-Stake joint

B:-Locked grooved joint

C:-Pittsburgh seam

D:-Double seam

Correct Answer:- Option-A

Question81:-What is the temperature of Oxy-acetylene **gas** flame ?

A:-1800 °C to 2200 °C

B:-2400 °C to 2700 °C

C:-2700 °C to 2800 °C

D:-3100 °C to 3300 °C

Correct Answer:- Option-D

Question82:-What is “Kerf” ?

A:-Cutting a grove in the surface of a metal using a gas cutting

B:-Width of the cut produced by a gas cutting operation

C:-The metal edge supplied in an angle where welding/cutting is to take place is known

D:-A process of cutting non-ferrous metals

Correct Answer:- Option-B

Question83:-Which of the following are the gas used as fuel for welding ?

A:-Acetylene gas

B:-Hydrogen gas

C:-Coal and LPG gas

D:-All of the above

Correct Answer:- Option-D

Question84:-Which gas-welding flame is most suitable for welding high carbon steels, cast iron and aluminium alloys, where oxidation of the work piece must be avoided ?

A:-Oxidising flame

B:-Neutral flame

C:-Carburising flame

D:-Air-acetylene flame

Correct Answer:- Option-C

Question85:-In Shielded Metal Arc Welding (SMAW), if the arc length is increased excessively while keeping the welding current unchanged, which combination is most likely to occur ?

A:-Higher arc voltage, increased spatter and reduced penetration

B:-Higher penetration, narrower bead and reduced spatter

C:-Lower arc voltage, deeper penetration and smoother bead

D:-Higher current, increased penetration and reduced electrode consumption

Correct Answer:- Option-A

Question86:-The distance between electrode tip and work piece through which the welding arc is maintained is known as ?

A:-Bevel

B:-Arc length

C:-Bracing

D:-Fusion

Correct Answer:- Option-B

Question87:-Which of the following is not a cause of back fire ?

A:-The pressure setting is high

B:-The pressure setting is low

C:-The nozzle is over heated

D:-The nozzle touches the molten pool

Correct Answer:- Option-A

Question88:-Two plates of equal thickness are joined by welding. One plate overlap the other, and the weld is deposited along the edge of the overlapping plate. Which type of welding joint is this ?

A:-Butt joint

B:-Corner joint

C:-T-joint

D:-Lap joint

Correct Answer:- Option-D

Question89:-In the electrode designation E7018, which statement is most accurate according to the AWS classification system ?

A:-It is a 70000 psi electrode with a low-hydrogen potassium-based coating and can be used in all positions except vertical-down

B:-It is a 70000 psi electrode with a low-hydrogen iron-powder coating, suitable for AC and DCEP, and usable in all welding positions

C:-It is 70000 psi electrode with a high-cellulose coating, suitable only for DCEN

D:-It is a 70000 psi electrode with a rutile coating, designed only for horizontal welding

Correct Answer:- Option-B

Question90:-Which of the following statement about an acetylene cylinder using in oxy acetylene gas welding is absolutely correct ?

A:-The valve socket is right hand thread, the steel bottle is painted black colour with $7m^3$ capacity for storage gas and the gas pressure is 120 to 150 kg/ cm^2

B:-The valve socket is right hand thread, the steel bottle is painted red colour with $9m^3$ capacity for storage gas and the gas pressure is 110 to 160 kg/cm^2

C:-The valve socket is left hand thread, the steel bottle is painted maroon colour with $9m^3$ capacity for storage gas and the gas pressure is 10 to 16 kg/cm^2

D:-The valve socket is left hand thread, the steel bottle is painted maroon colour with $6m^3$ capacity for storage gas and the gas pressure is 15 to 16 kg/cm^2

Correct Answer:- Option-D

Question91:-Which lathe accessory is used to hold the large, flat, irregular shaped work piece ?

A:-Four jaw chuck

B:-Face plate

C:-Three jaw chuck

D:-Catch plate

Correct Answer:- Option-B

Question92:-Which gear box is provided with levers outside the box casting ?

A:-Change gear unit

B:-Quick change gear box

C:-Fixed stud gear

D:-Tumbler gear unit

Correct Answer:- Option-D

Question93:-Which material is used to make Lathe bed ?

A:-Pig iron

B:-Cast iron

C:-Wrought iron

D:-Mild steel

Correct Answer:- Option-B

Question94:-What is the factor to select the suitable lathe carrier ?

A:-Diameter of the work

B:-Material of the work

C:-Length of the work

D:-Material of the tool

Correct Answer:- Option-A

Question95:-What is the methods of turning keeping the same diameter throughout the length ?

A:-Grooving

B:-Step turning

C:-Plain turning

D:-Chamfering

Correct Answer:- Option-C

Question96:-What is the name of the defect occurred, if the Lathe tool not set to the correct centre height while facing ?

A:-Concave face

B:-Convex face

C:-Correct face

D:-A pip left in the centre

Correct Answer:- Option-D

Question97:-Which cutting tool is used as a brazed tool and throw away tool bit ?

A:-High speed steel

B:-Carbide cutting tool

C:-High carbon steel

D:-Stelite

Correct Answer:- Option-B

Question98:-What is the name of the tool angle if the slope is from the front towards the back of the tool ?

A:-Negative back rake angle

B:- Clearance angle

C:-Zero rake angle

D:-Positive top rake angle

Correct Answer:- Option-D

Question99:-What type of taper provided on tail stock spindle ?

A:-Jarno taper

B:-Metric taper

C:-Morse taper

D:-Brown and sharp taper

Correct Answer:- Option-C

Question100:-What is the unit of feed ?

A:-cm/rev

B:-mm/rev

C:-inch/rev

D:-metre/rev

Correct Answer:- Option-B